Product Data Sheet

GW44904NWK

44 CE Range

44 CE APTA is the Gewiss range of junction boxes designed to adapt to different installation needs: to fit the environment, suit the application, and align with common installation habits. The range is available in three sizes (2K, 3K, and 4) and three colours (black, grey, and white) to meet different application and aesthetic requirements. 44 CE APTA offers six fixing methods for maximum installation flexibility, including external screw fixing with bracket included, internal screw fixing, knock-in fixing with threaded base, panel mounting, fixing with cable ties for trays or temporary structures, and the patented nail gun fixing system. A dedicated range of accessories further enhances installation speed, safety, and reliability, including terminal supports compatible with Wago 221-412, 221-413, and 221-415, as well as the patent-pending Earthing Clamp for metal cable glands used with armoured cables.

GENERAL INFORMATION	-
Accordance with Standards	IEC 60670-1, IEC 60670-22
Application	Ordinary junctions
Internal dimensions BxDxH (mm)	100x100x52
External dimensions BxDxH (mm)	108x108x58
Material	PP + GF (case), TPE (membrane), PA + GF (bracket)
Colour	White RAL 9016
Lid	Low screwed
Type of bottom	Standard
Walls	With threaded entries, membrane and knock-out
-	-
-	-

MECHANICAL AND FUNCTIONAL CHARACTERISTICS	-
Lid screws (no. and type)	4 x 1/4 turn, captive, sealable
Captive lid	Yes
Operating temperature	-25 +60 °C
IP degree	IP66 (membrane) / IP67 (cable gland)
Glow wire test	750 °C (case), 650 °C (membrane)
Thermo-pressure with ball	85 °C
UV resistance	Yes (IEC 60670-22)
Halogen Free	Halogen-free in compliance with EN IEC 63355
Cable entries on sides	7 x M20x1,5 threaded entries with Ø 3÷12 mm membrane 1 x M20x1,5 threaded entry with Ø 3÷12 mm membrane and Ø 25 mm knock-out
Cable entries on back	2 x Ø 3÷12 mm membrane entries
-	-

ELECTRICAL CHARACTERISTICS	-
Insulation class	II (according to IEC 61140 standards)
AC Rated operational voltage (Ue)	750 V
Insulation voltage (Ui)	750 V

EQUIPMENT AND ACCESSORIES	-
Accessories supplied	Fixing bracket
Completeable with	GW44622 (double insulation caps), GW44741 (supporto connettori Wago 221)

BEHAVIOUR WITH CHEMICAL AND ATMOSPHERIC AGENTS

Part	Saline solution	Acids		Bases		Solvents				Mineral oil	UV rays
		Concentrated	Diluted	Concentrated	Diluted	Hexane	Benzol	Propanol	Alcohol		
Case	Resistant	Limited resistance	Resistant	Resistant	Resistant	Limited resistance	Not resistant	Resistant	Resistant	Resistant	Resistant
Membrane	Resistant	Limited resistance	Resistant	Resistant	Resistant	Not resistant	Not resistant	Not resistant	Resistant	Limited resistance	Resistant

DIMENSIONAL

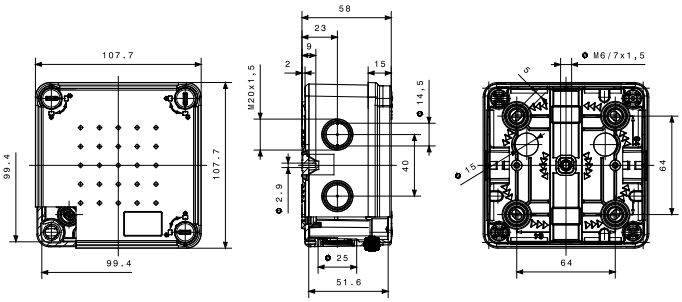

TECHNICAL SYMBOLOGY

INSTALLATION -25°C min +60°C max
-25 +60 °C

IP
IP66 (membrane) / IP67 (cable gland)

GWT
750 °C (case), 650 °C (membrane)

85 °C

UV IEC 60670-22
Yes (IEC 60670-22)

HF HALOGEN FREE
Halogen-free in compliance with EN IEC 63355

EN 61140
II (according to IEC 61140 standards)

STANDARDS/APPROVALS

CE UK CA